ASSEMBLY TEMPLATE

STORAGE CABINET TABLES-SINGLE

2100K, C2100K, 2200K, & C2200K SERIES
ASSEMBLY INSTRUCTIONS

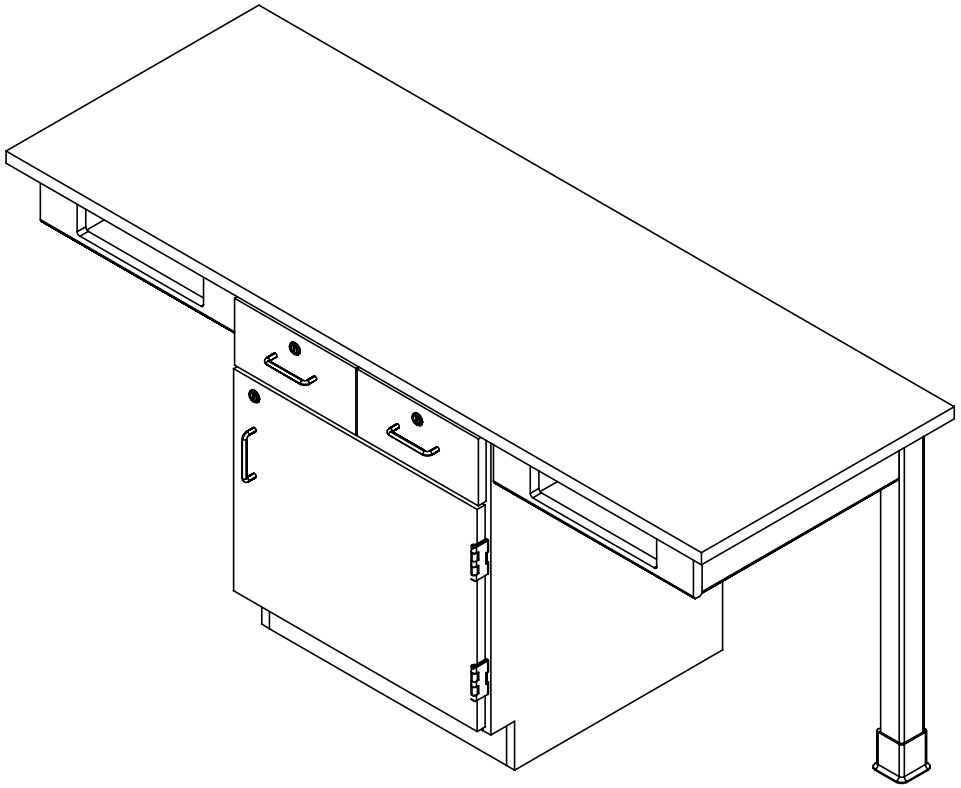

NOTE:

1. MODEL VIEWS MAY NOT REPRESENT EXACT MODEL PURCHASED

REVISION LEVEL				
REV.	DESCRIPTION	DATE	NAME	ECN NO.
A	CREATED DRAWING	3/15/16	EMK	-

ALL DIMENSIONS ARE IN INCHES UNLESS NOTED OTHERWISE CABINET SQUARENESS = ± .0625 FRACTIONAL VALUES = ± 1/32" - ALL VALUES ± OVERALL -	DWN BY: EMK	DATE DWN: 3/15/16	
	APR BY:	DATE APR:	
	APR BY:	DATE APR:	

CONFIDENTIAL:
ALL DESIGN RIGHTS RESERVED
THE INFORMATION, DATA, DESIGN, AND DRAWINGS EMBODIED IN THIS DOCUMENT AND ALL REPRODUCTIONS THEREOF ARE THE EXCLUSIVE PROPERTY OF DIVERSIFIED WOODCRAFTS, INC.

THESE DOCUMENTS ARE SUPPLIED WITH THE UNDERSTANDING THAT THEY WILL NOT BE DISCLOSED TO THIRD PARTIES WITHOUT WRITTEN CONSENT OF DIVERSIFIED WOODCRAFTS, INC. ANY REPRODUCTION IN PART OR WHOLE WITHOUT WRITTEN CONSENT IS SUBJECT TO LEGAL ACTION.

TITLE:
STORAGE CABINET TABLES-SINGLE
ASSEMBLY INSTRUCTIONS

DRAWING NUMBER:	SCALE:	SHEET:	REVISION:
STORAGE CABINET TABLES	NTS	1 OF 6	REV A

ASSEMBLY TEMPLATE

TOOLS REQUIRED

½" WRENCH
½" SOCKET AND TORQUE WRENCH - OPTIONAL
CONTACT CEMENT
SCREW DRIVER

ASSEMBLY COMPONENTS

ITEMS INCLUDED	PART #	PART DESCRIPTION	QTY
CABINET ASSEMBLY	VARIES	CABINET STYLES VARY WITH CHOICE OF TABLE STYLE	1
TOP AND APRON ASSEMBLY	N/A	TOP ASSEMBLY (FACTORY ASSEMBLED)	1
LEGS	500100	LEG,OAK 2.25X2.25X28.25	2
LEG HARDWARE	520001	LEG HARDWARE KIT, 1 LEG	2
LEG BOOT	100076	LEG BOOT,BLK,RUBBER	2
RUBBER BASE MOLDING	100283	RUBBER BASE MOLDING(SOLD BY FOOT)	7.5
STAINLESS STEEL CORNERS	100057	CORNERS-STAINLESS STEEL,BASE	4
SCREWS - BASE	100064	SCREW,#6X½ PTH SMS SS SCREW	16

NOTE:

1.

REV.	DESCRIPTION	DATE	NAME	ECN NO.
A	CREATED DRAWING	3/15/16	EMK	-

REVISION LEVEL

ALL DIMENSIONS ARE IN INCHES UNLESS NOTED OTHERWISE

CABINET SQUARENESS = ± .0625
FRACTIONAL VALUES = ± 1/32"
- ALL VALUES ± OVERALL -

DWN BY:	EMK	DATE DWN:	3/15/16
APR BY:		DATE APR:	
APR BY:		DATE APR:	

CONFIDENTIAL:
ALL DESIGN RIGHTS RESERVED
THE INFORMATION, DATA, DESIGN, AND DRAWINGS EMBODIED IN THIS DOCUMENT AND ALL REPRODUCTIONS THEREOF ARE THE EXCLUSIVE PROPERTY OF DIVERSIFIED WOODCRAFTS, INC.

THESE DOCUMENTS ARE SUPPLIED WITH THE UNDERSTANDING THAT THEY WILL NOT BE DISCLOSED TO THIRD PARTIES WITHOUT WRITTEN CONSENT OF DIVERSIFIED WOODCRAFTS, INC. ANY REPRODUCTION IN PART OR WHOLE WITHOUT WRITTEN CONSENT IS SUBJECT TO LEGAL ACTION.

TITLE:
STORAGE CABINET TABLES-SINGLE
TOOLS AND ASSEMBLY COMPONENTS

DRAWING NUMBER:	SCALE:	SHEET:	REVISION:
STORAGE CABINET TABLES	NTS	2 OF 6	REV A

ASSEMBLY TEMPLATE

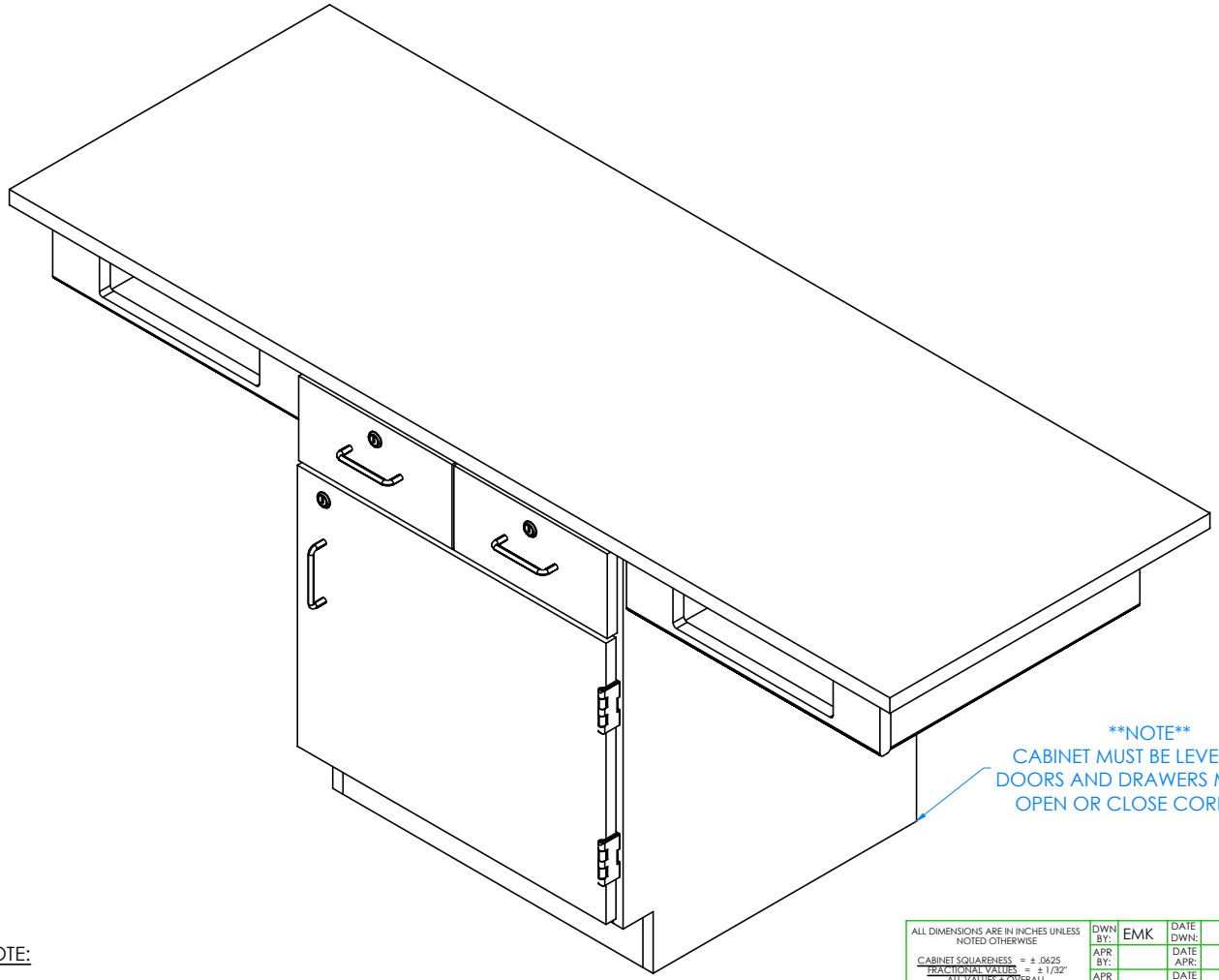

NOTE
CABINET MUST BE LEVELED OR
DOORS AND DRAWERS MAY NOT
OPEN OR CLOSE CORRECTLY

STEP 1:

- POSITION UNIT IN DESIRED LOCATION.
- LEVEL CABINET.
- ANCHOR TO FLOOR.
- YOU WILL NEED TWO OR THREE PEOPLE TO HELP WITH THIS STEP, AS TOP ASSEMBLY WILL BE HEAVY.

NOTE:

1.

REV.	DESCRIPTION	DATE	NAME	ECN NO.
A	CREATED DRAWING	3/15/16	EMK	-
REVISION LEVEL				

ALL DIMENSIONS ARE IN INCHES UNLESS NOTED OTHERWISE

CABINET SQUARENESS = ± .0625
FRACTIONAL VALUES = ± 1/32"
- ALL VALUES ± OVERALL -

DWN BY:	EMK	DATE DWN:	3/15/16
APR BY:		DATE APR:	
APR BY:		DATE APR:	

CONFIDENTIAL:
ALL DESIGN RIGHTS RESERVED
THE INFORMATION, DATA, DESIGN, AND DRAWINGS EMBODIED IN THIS DOCUMENT AND ALL REPRODUCTIONS THEREOF ARE THE EXCLUSIVE PROPERTY OF DIVERSIFIED WOODCRAFTS, INC.

THESE DOCUMENTS ARE SUPPLIED WITH THE UNDERSTANDING THAT THEY WILL NOT BE DISCLOSED TO THIRD PARTIES WITHOUT WRITTEN CONSENT OF DIVERSIFIED WOODCRAFTS, INC. ANY REPRODUCTION IN PART OR WHOLE WITHOUT WRITTEN CONSENT IS SUBJECT TO LEGAL ACTION.

TITLE:
STORAGE CABINET TABLES-SINGLE
ASSEMBLY INSTRUCTIONS

DRAWING NUMBER:	SCALE:	SHEET:	REVISION:
STORAGE CABINET TABLES	NTS	3 OF 6	REV A

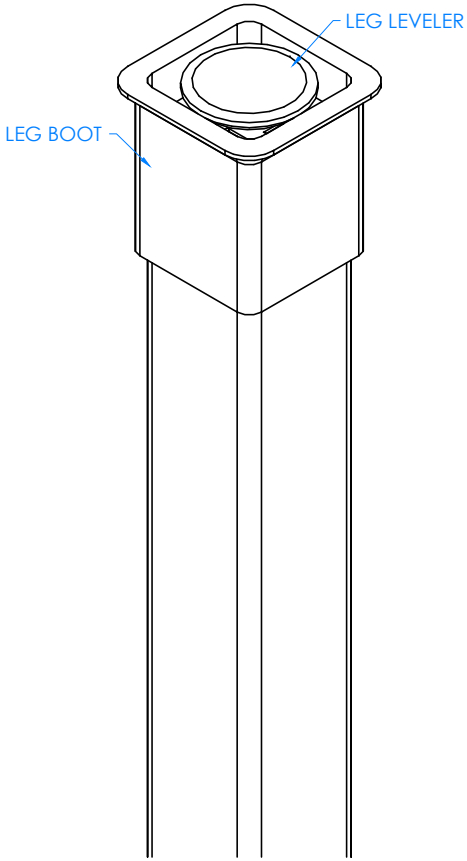

CLOSE UP OF LEG LEVELER AND LEG BOOT ASSEMBLY

STEP 2:

- SLIDE LEG BOOTS ONTO LEGS WITH FLARED END TOWARD BOTTOM OF LEGS.
- SCREW LEG LEVELERS INTO T-NUT ON BOTTOM OF LEGS.

NOTE:

1.

REV.	DESCRIPTION	DATE	NAME	ECN NO.
A	CREATED DRAWING	3/15/16	EMK	-

REVISION LEVEL

ALL DIMENSIONS ARE IN INCHES UNLESS NOTED OTHERWISE

CABINET SQUARENESS = ± .0625
FRACTIONAL VALUES = ± 1/32"
- ALL VALUES ± OVERALL -

DWN BY:	EMK	DATE DWN:	3/15/16
APR BY:		DATE APR:	
APR BY:		DATE APR:	

CONFIDENTIAL:
ALL DESIGN RIGHTS RESERVED
THE INFORMATION, DATA, DESIGN, AND DRAWINGS EMBODIED IN THIS DOCUMENT AND ALL REPRODUCTIONS THEREOF ARE THE EXCLUSIVE PROPERTY OF DIVERSIFIED WOODCRAFTS, INC.

THESE DOCUMENTS ARE SUPPLIED WITH THE UNDERSTANDING THAT THEY WILL NOT BE DISCLOSED TO THIRD PARTIES WITHOUT WRITTEN CONSENT OF DIVERSIFIED WOODCRAFTS, INC. ANY REPRODUCTION IN PART OR WHOLE WITHOUT WRITTEN CONSENT IS SUBJECT TO LEGAL ACTION.

TITLE:
STORAGE CABINET TABLES-SINGLE ASSEMBLY INSTRUCTIONS

DRAWING NUMBER:	SCALE:	SHEET:	REVISION:
STORAGE CABINET TABLES	NTS	4 OF 6	REV A

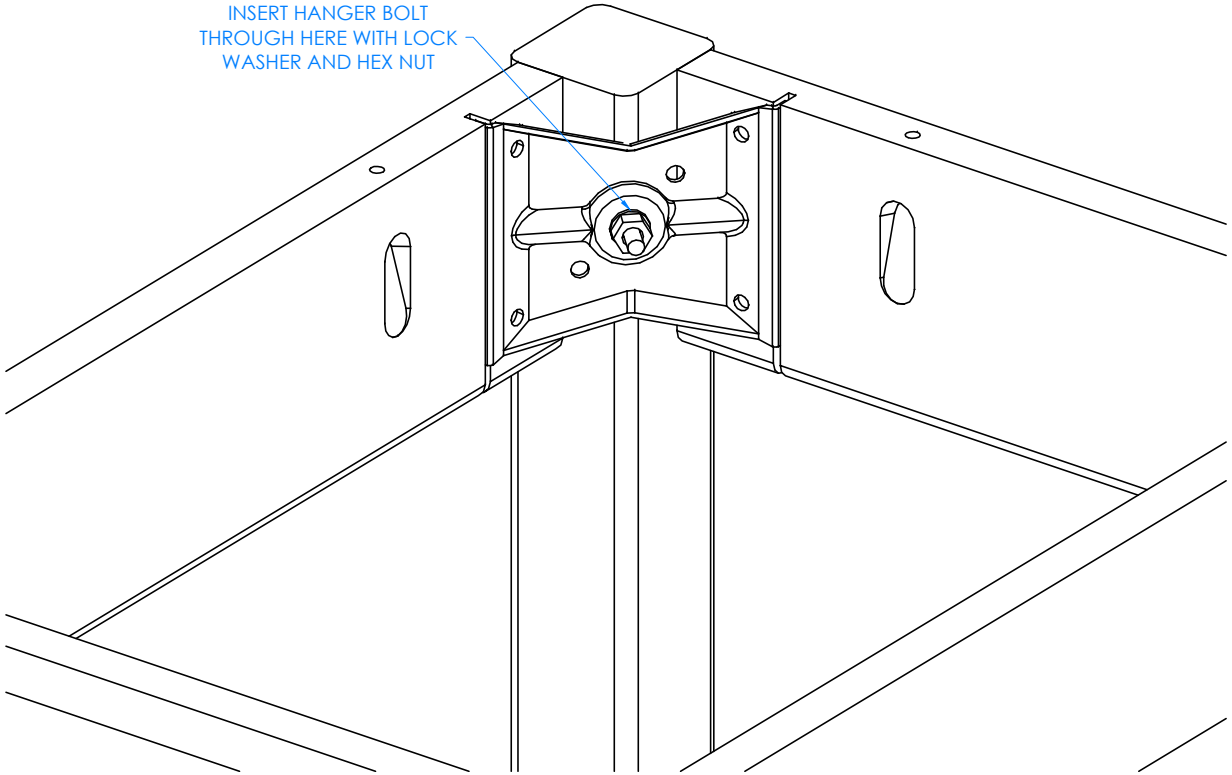

CLOSE UP OF CORNER BRACKET ASSEMBLY
(INTERNAL COMPONENTS REMOVED TO SHOW CLARITY)

STEP 3:

- INSERT HANGER BOLT ON ONE LEG THROUGH THE CORNER BRACKET AND INSERT LOCK WASHER AND HEX NUT.
- TIGHTEN NUT USING A ½" WRENCH OR ½" SOCKET AND TORQUE WRENCH, TO A MINIMUM OF 12FT LBS BUT NOT TO EXCEED 17FT LBS.
- REPEAT FOR OTHER LEG.

NOTE:

1.

REV.	DESCRIPTION	DATE	NAME	ECN NO.
A	CREATED DRAWING	3/15/16	EMK	-
REVISION LEVEL				

ALL DIMENSIONS ARE IN INCHES UNLESS NOTED OTHERWISE	DWN BY: EMK	DATE DWN: 3/15/16	
CABINET SQUARENESS = ± .0625 FRACTIONAL VALUES = ± 1/32" - ALL VALUES ± OVERALL -	APR BY:	DATE APR:	
	APR BY:	DATE APR:	

CONFIDENTIAL:
ALL DESIGN RIGHTS RESERVED
THE INFORMATION, DATA, DESIGN, AND DRAWINGS EMBODIED IN THIS DOCUMENT AND ALL REPRODUCTIONS THEREOF ARE THE EXCLUSIVE PROPERTY OF DIVERSIFIED WOODCRAFTS, INC.

THESE DOCUMENTS ARE SUPPLIED WITH THE UNDERSTANDING THAT THEY WILL NOT BE DISCLOSED TO THIRD PARTIES WITHOUT WRITTEN CONSENT OF DIVERSIFIED WOODCRAFTS, INC. ANY REPRODUCTION IN PART OR WHOLE WITHOUT WRITTEN CONSENT IS SUBJECT TO LEGAL ACTION.

TITLE:
STORAGE CABINET TABLES-SINGLE
ASSEMBLY INSTRUCTIONS

DRAWING NUMBER:	SCALE:	SHEET:	REVISION:
STORAGE CABINET TABLES	NTS	5 OF 6	REV A

ASSEMBLY TEMPLATE

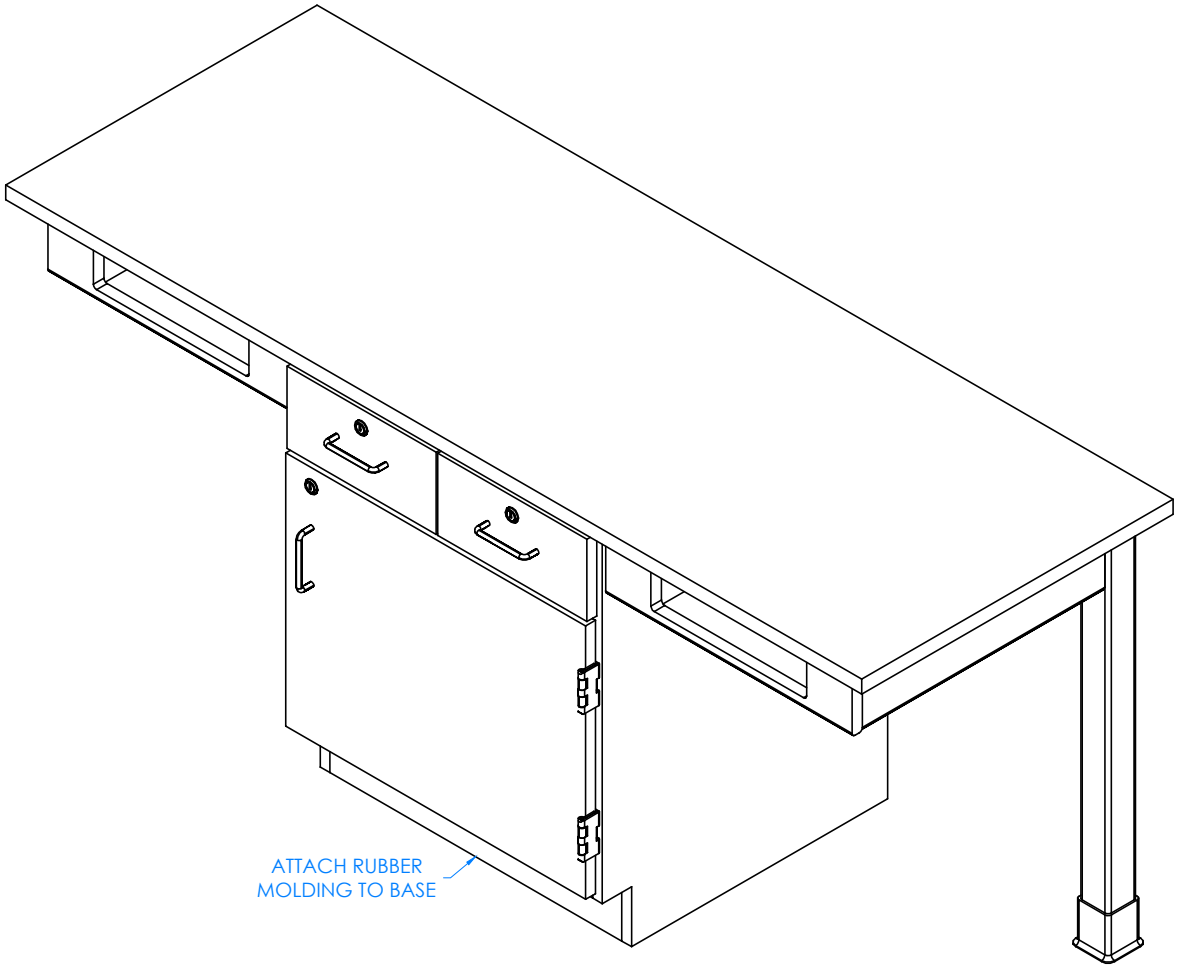

STEP 4:

- ADJUST LEG LEVELERS TO LEVEL TABLE.
- ATTACH RUBBER MOLDING TO BASE OF CABINET USING CONTACT CEMENT.
- SCREW STAINLESS STEEL CORNER BRACKETS ON EACH CORNER OVER BASE MOLDING WITH HARDWARE PROVIDED.

NOTE:

1.

COMPLETE UNIT SHOWN

REV.	DESCRIPTION	DATE	NAME	ECN NO.
A	CREATED DRAWING	3/15/16	EMK	-
REVISION LEVEL				

ALL DIMENSIONS ARE IN INCHES UNLESS NOTED OTHERWISE

CABINET SQUARENESS = ± .0625
FRACTIONAL VALUES = ± 1/32"
- ALL VALUES ± OVERALL -

DWN BY:	EMK	DATE DWN:	3/15/16
APR BY:		DATE APR:	
APR BY:		DATE APR:	

CONFIDENTIAL:
ALL DESIGN RIGHTS RESERVED
THE INFORMATION, DATA, DESIGN, AND DRAWINGS EMBODIED IN THIS DOCUMENT AND ALL REPRODUCTIONS THEREOF ARE THE EXCLUSIVE PROPERTY OF DIVERSIFIED WOODCRAFTS, INC.

THESE DOCUMENTS ARE SUPPLIED WITH THE UNDERSTANDING THAT THEY WILL NOT BE DISCLOSED TO THIRD PARTIES WITHOUT WRITTEN CONSENT OF DIVERSIFIED WOODCRAFTS, INC. ANY REPRODUCTION IN PART OR WHOLE WITHOUT WRITTEN CONSENT IS SUBJECT TO LEGAL ACTION.

TITLE:
STORAGE CABINET TABLES-SINGLE
ASSEMBLY INSTRUCTIONS

DRAWING NUMBER:	SCALE:	SHEET:	REVISION:
STORAGE CABINET TABLES	NTS	6 OF 6	REV A